ENGINE, TURBO COOLING AND OIL - Z26SPD92AN/AH/BN/BH (C750284)

2026 RZR - RZR PRO S ULTIMATE (R01) - Z26SPD92AN/AH/BN/BH

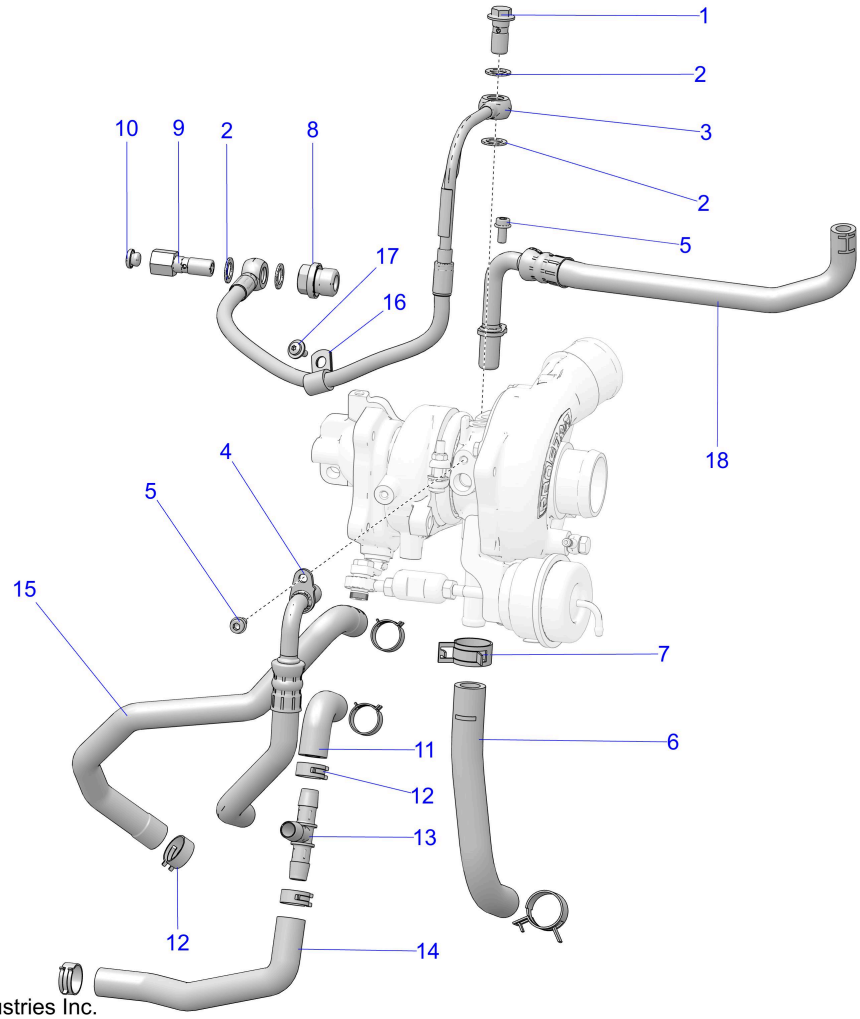

© 2024 Polaris Industries Inc. C750284

Reference #	Part#	Description	Quantity
1	2522034	BOLT-BANJO,M12X1.5	1
2	7556937	WASHER-COPPER SEALING	4
3	2522444	ASM-OIL LINE,SUPPLY	1
4	2522044	ASM-COOLANT LINE,IN	1
5	7521029	SCR-SHFL-M6X1.0X12 12.9 SPC SP	1
6	5415727	HOSE-DRAIN,FORMED	1
7	7081825	CLAMP-HOSE,SPRING,24MM	2
8	7052689	PLUG,ADAPTER,W/O-RING,M20X1.5	1
9	7052693	BOLT-BANJO,M12X1.5-1/4NPT	1
10	7052640	PLUG-HEX SCKT,W/O-RING,M10X1	1
11	5416809	HOSE-OIL COOLER IN,UPPER	1
12	7081026	CLAMP-HOSE,SPRING .81	6
13	7052719	TEE-COOLANT,IN	1
14	2522045	ASM-HOSE,OIL COOLER IN [INCL. 11-14]	
14	5416808	HOSE-COOLANT IN	1
15	5416752	HOSE-OIL COOLER OUT	1
16	7081722	CLIP-P,7/16X.343 HOLE	1
17	7518176	SCR-10-24X1/2 PH/TX/TRIRD/SEMB	1

18	2522043	ASM-COOLANT LINE,OUT	1

Copyright 1996-2026 Polaris Industries U.S.A All rights reserved.